Cuscinetti a sfera fila unica
7315-B-JP-FAG - 7315-B-JP-FAG

https://www.123cuscinetti.ch/cuscinetti-supporti/cuscinetti-sfera/fila-unica/7315-b-jp-fag

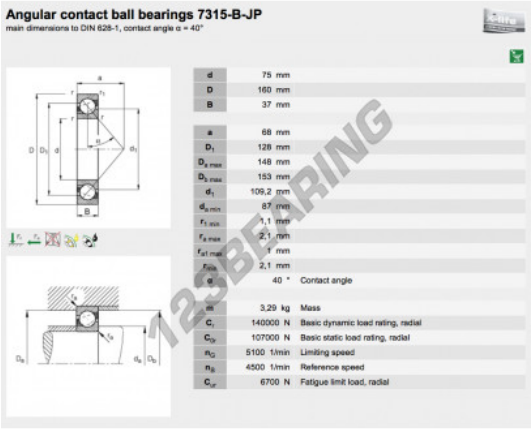

Angular contact ball bearings 7315-B-JP

main dimensions to DIN 628-1, contact angle α = 40°

d	75 mm	
D	160 mm	
B	37 mm	
a	68 mm	
D_1	128 mm	
$D_{2\,max}$	148 mm	
$D_{3\,max}$	153 mm	
d_1	109,2 mm	
$d_{a\,min}$	87 mm	
$r_{1,min}$	1,1 mm	
$r_{a\,max}$	2,1 mm	
$r_{a1\,max}$	1 mm	
$r_{b\,max}$	2,1 mm	
α	40 °	Contact angle
m	3,29 kg	Mass
C_r	140000 N	Basic dynamic load rating, radial
C_{0r}	107000 N	Basic static load rating, radial
n_G	5100 1/min	Limiting speed
n_B	4500 1/min	Reference speed
C_{ur}	6700 N	Fatigue limit load, radial

123BEARING

CARATTERISTICHE DEL PRODOTTO

Marchio	FAG
N° Ean13	3663952348124
Diametro interno	75 mm
Diametro esterno	160 mm
Spessore	37 mm
Imballaggio	1

contatto@123cuscinetti.ch
CRT4 de Lesquin 60 Rue Du Haut De Sainghin 59273 Fretin FRANCE